**VOLA KV1**

Fitting instruction
Montageanleitung
Monteringsvejledning
Monteringsvägledning
Montage hanleiding
Manuel de montage

GODKENDT TIL DRIKKEVAND

04/00203
04/00206

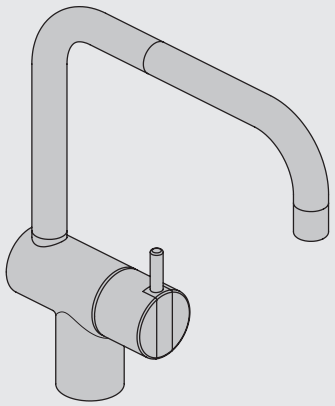

www.vola.com

vola

mnt_KV1_V3_40998778
06-09-2023

5 705230 005263

**Data, 3 Bar /43.5 Psi:**

| | l/min. | Gal/min. |
|---|---|---|
| KV1: | 9,0 | 2.4 |
| KV1US: | 4,5 | 1.2 |

Max. 65°C, 150°F

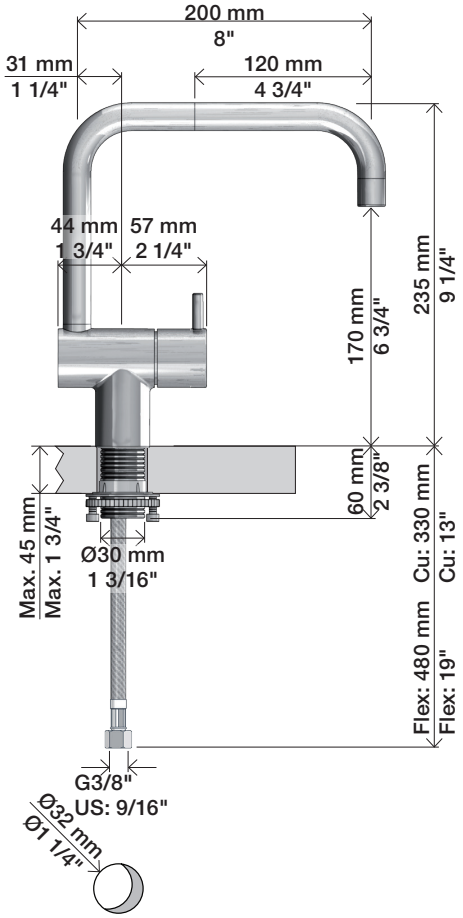


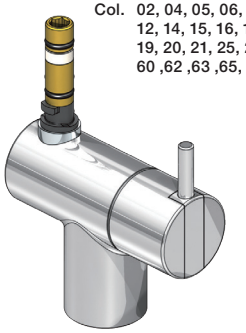

Col. 02, 04, 05, 06, 08, 09, 12, 14, 15, 16, 17, 18, 19, 20, 21, 25, 27, 60 ,62 ,63 ,65, 66

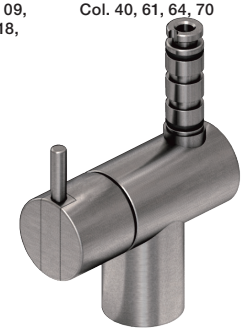

Col. 40, 61, 64, 70

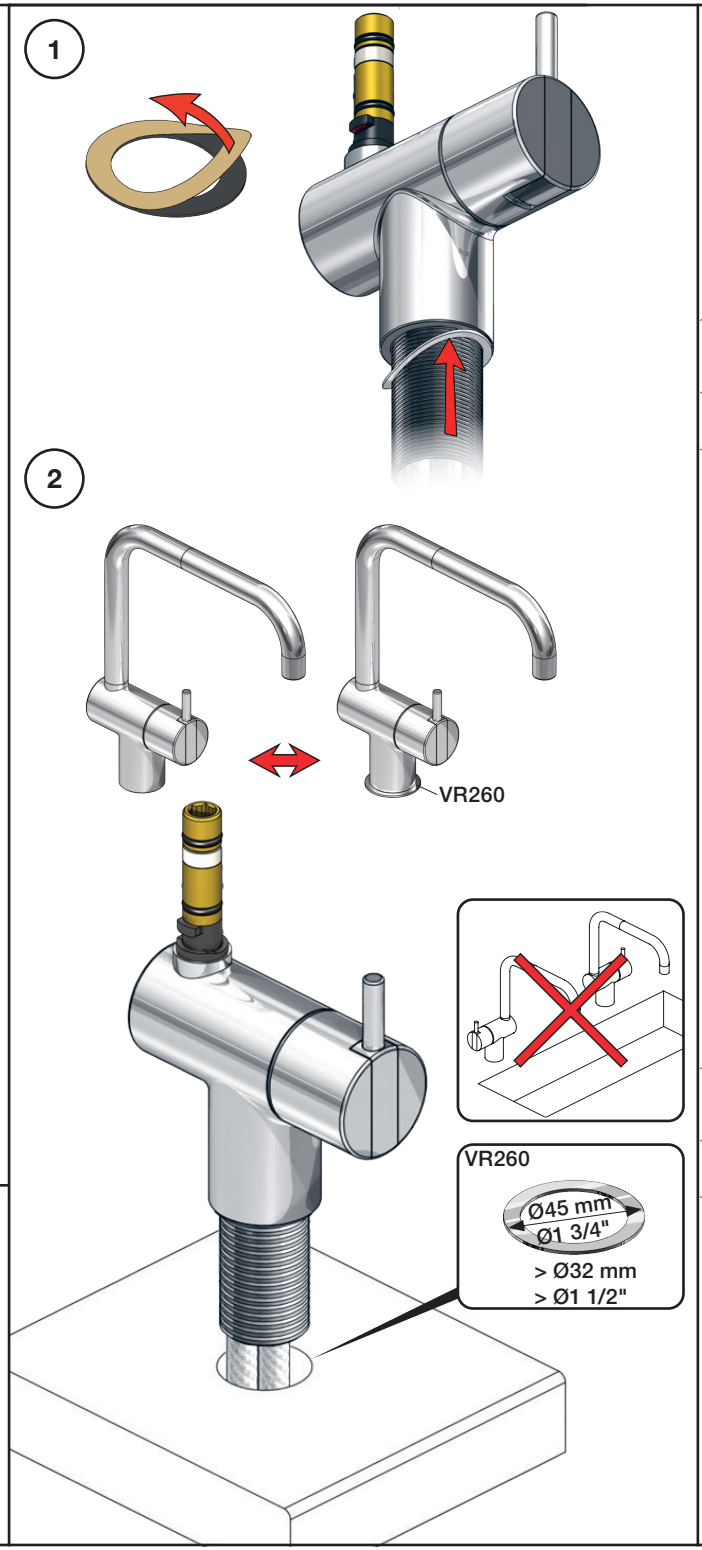


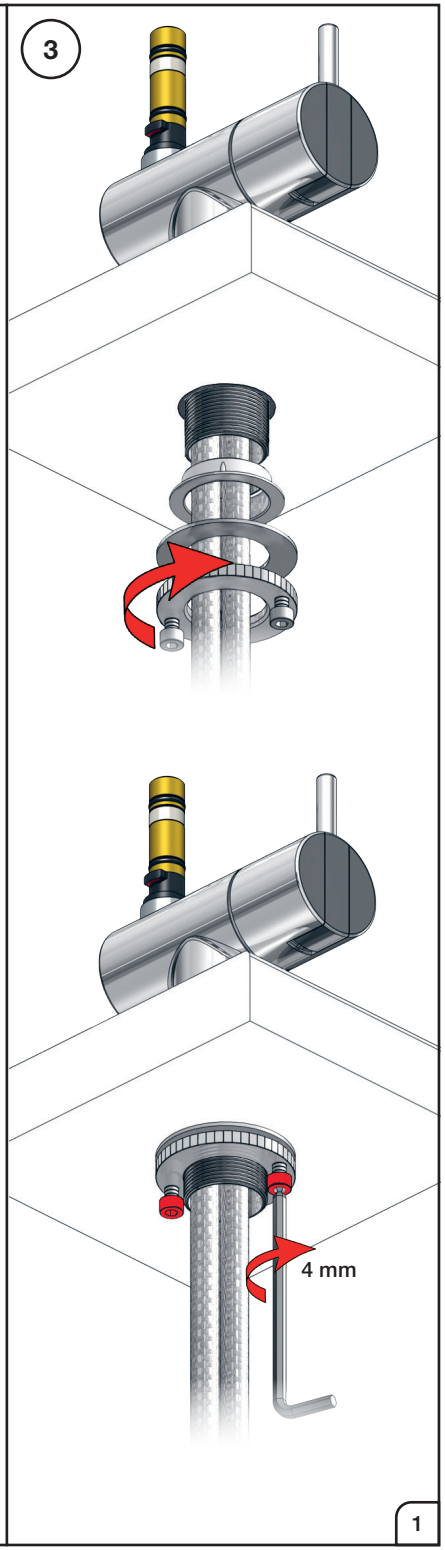

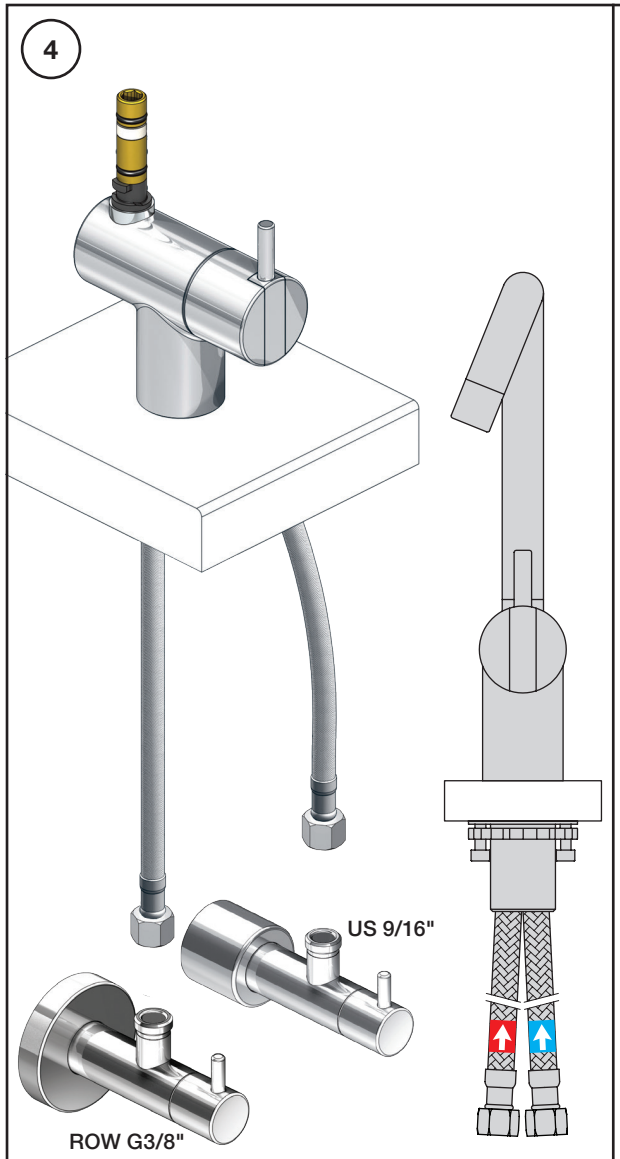


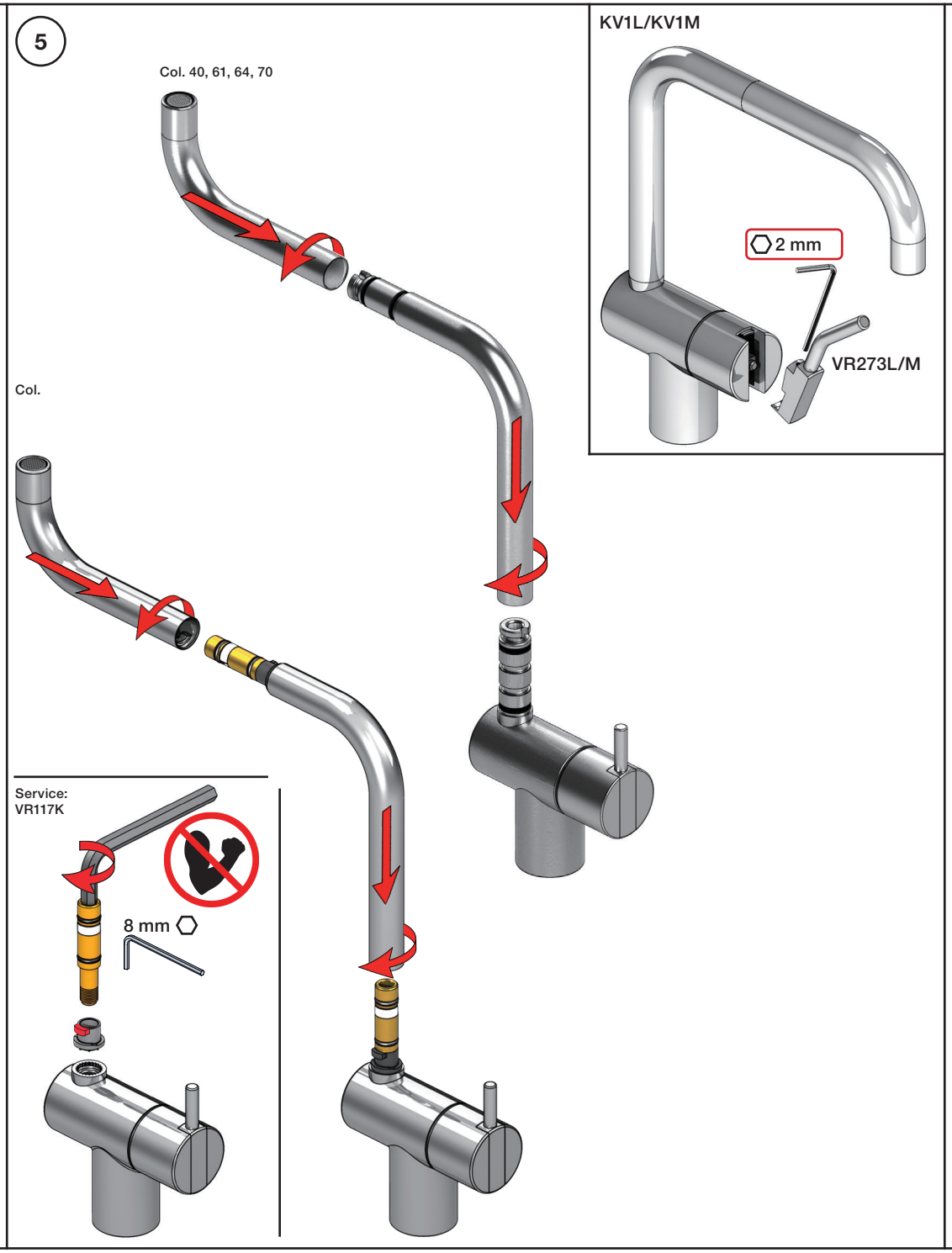





Operation
Bedienung
Betjening

Bruk
Bediening
Fonctionnement

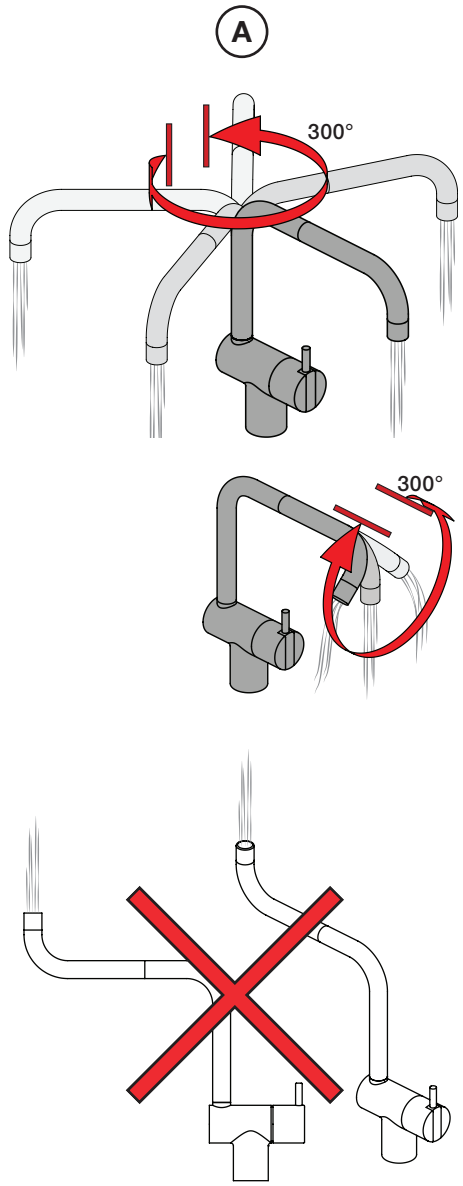




VOLA A/S • Lunavej 2 • DK-8700 Horsens • Tel. +45 7023 5500 • Fax +45 7023 5511 • sales@vola.dk • www.vola.com

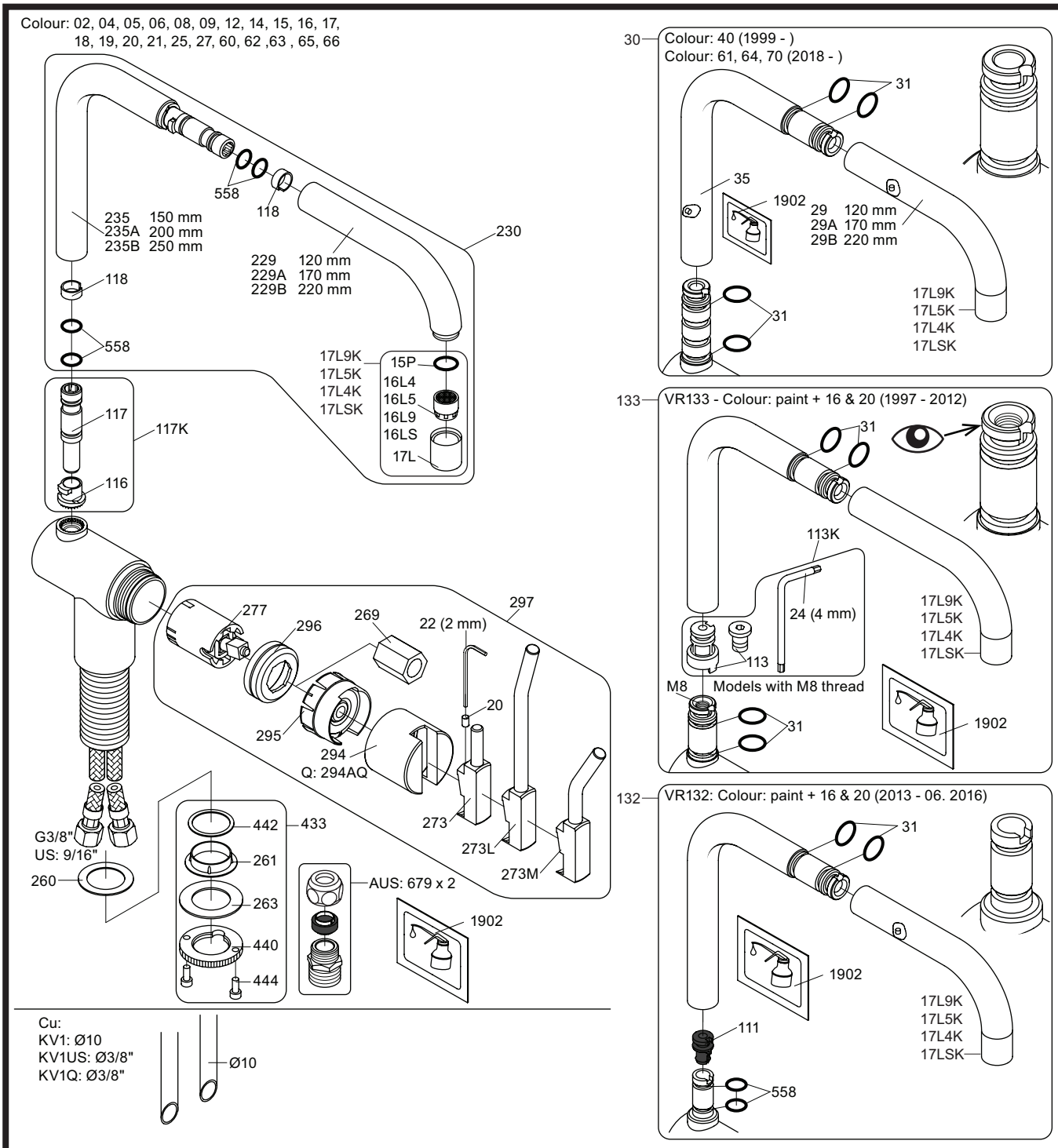


| | |
|---|---|
| NR.10/L/M: | VR20, VR22, VR273/L/M, VR294, VR295 |
| VR17L4K: | VR15P, VR16L4, VR17L (*US Standard*) |
| VR17L5K: | VR15P, VR16L5, VR17L |
| VR17L9K: | VR15P, VR16L9, VR17L |
| VR17LSK: | VR15P, VR16LS, VR17L |
| VR30: | VR15P, VR16L9, VR17L, VR29, 4xVR31, VR35, VR1902 (*F40*) (*and KV1 from 1972 - 1996*) |
| VR132: | VR15P, VR16L9, VR17L, 2xVR31, 2xVR558, VR1902 (*2013 - 06. 2016*) |
| VR133: | VR15P, VR16L9, VR17L, VR24, 4xVR31, VR113, VR1902 (*1997 - 2012*) |
| VR230: | VR15P, VR16L9, VR17L, 2xVR118, VR229, VR235, 4xVR558, VR1902 (*06-2016 -* ) |
| VR117K: | VR116, VR117, VR118, 2xVR558, VR1902 |
| VR277K: | VR22, VR269, VR277 |
| VR297/L/M: | VR20, VR22, VR269, VR273/L/M, VR277, VR294, VR295, VR296 |
| VR433: | VR261, VR263, VR440, VR442, 2xVR444 |

vola
Lunavej 2
DK-8700 Horsens
Tlf : + 45 7023 5500
sales@vola.com
www.vola.com

## KV1 Family:

**KV1: /250, /300**
**KV1L: /250, /300**
**KV1M: /250, /300**

**Date** Jan. 23

**Rev.** 9

**Sheet** SB25.2