VOLA HV1, HV3, HV4

Fitting instruction
Montageanleitung
Monteringsvejledning
Monteringsvägledning
Montage hanleiding
Manuel de montage

GODKENDT TIL DRIKKEVAND

HV1, HV3:
04/00295
04/00300

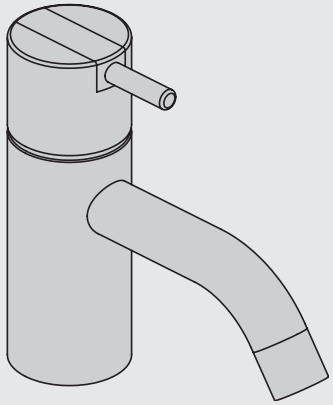

www.vola.com

HV1/HV3/HV4_V6_40999827
13-11-2023

5 703182 372594

HV1, HV3	L	H	h
Std.:	114 mm 4 1/2"	120 mm 4 3/4"	27 mm 1"
+30:	114 mm 4 1/2"	150 mm 6"	56 mm 2 1/4"
/150:	150 mm 6"	120 mm 4 3/4"	27 mm 1"
+30/150:	150 mm 6"	150 mm 6"	56 mm 2 1/4"
+170:	114 mm 4 1/2"	290 mm 11 1/2"	197 mm 7 3/4"
+170/150:	150 mm 6"	290 mm 11 1/2"	197 mm 7 3/4"

HV1+170:

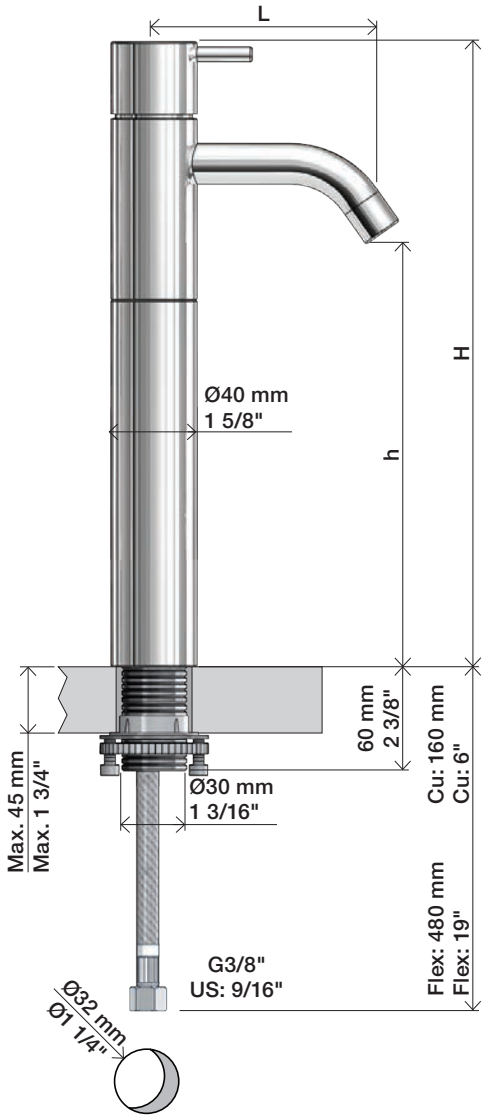

HV1/3:

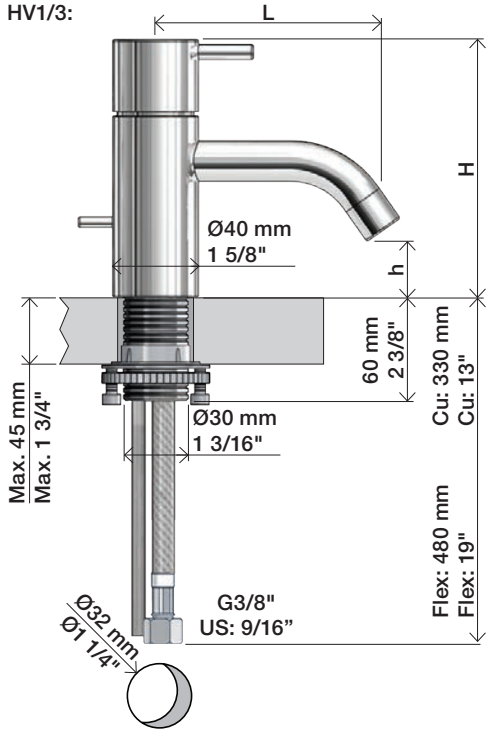

HV4:

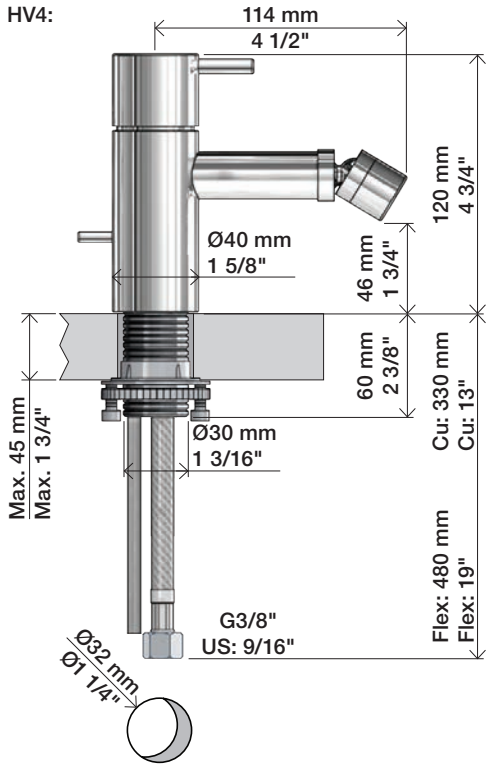

1

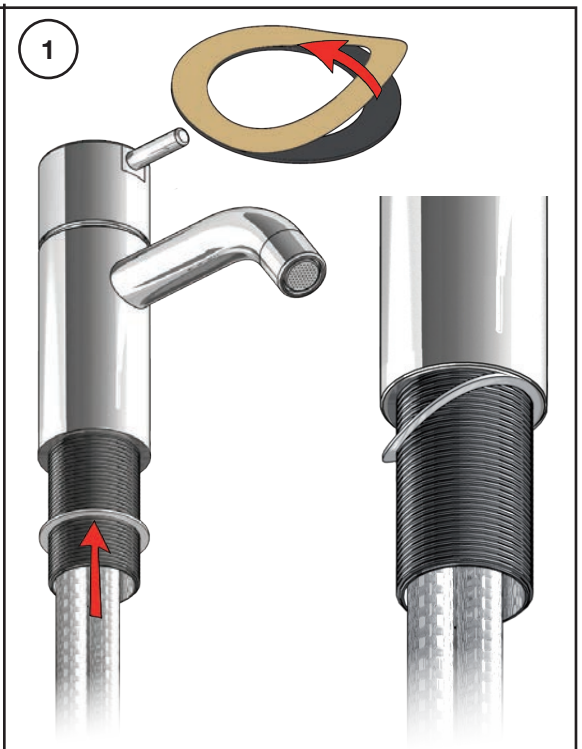

2

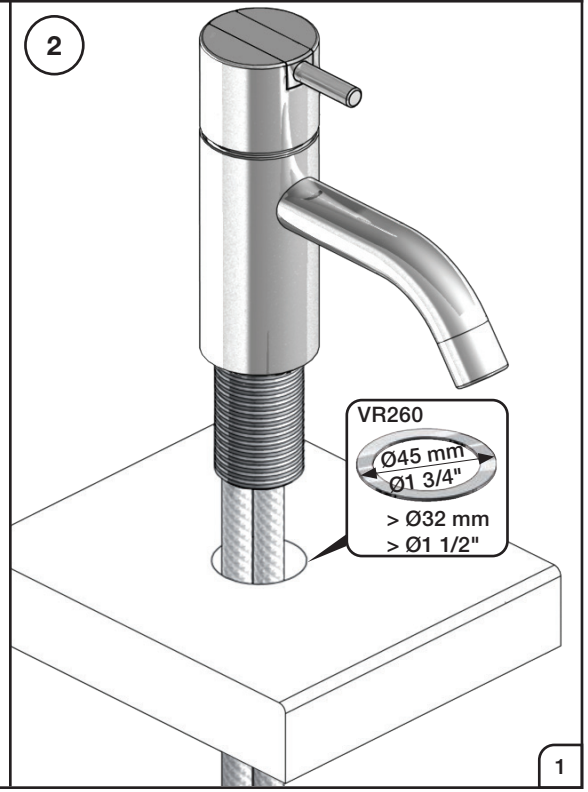

3

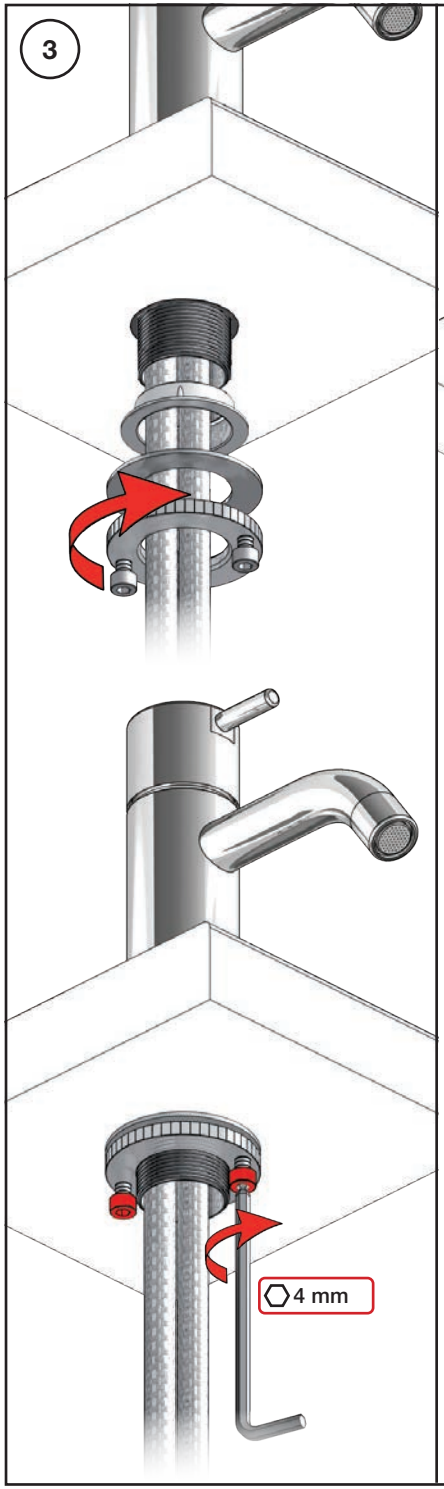

4

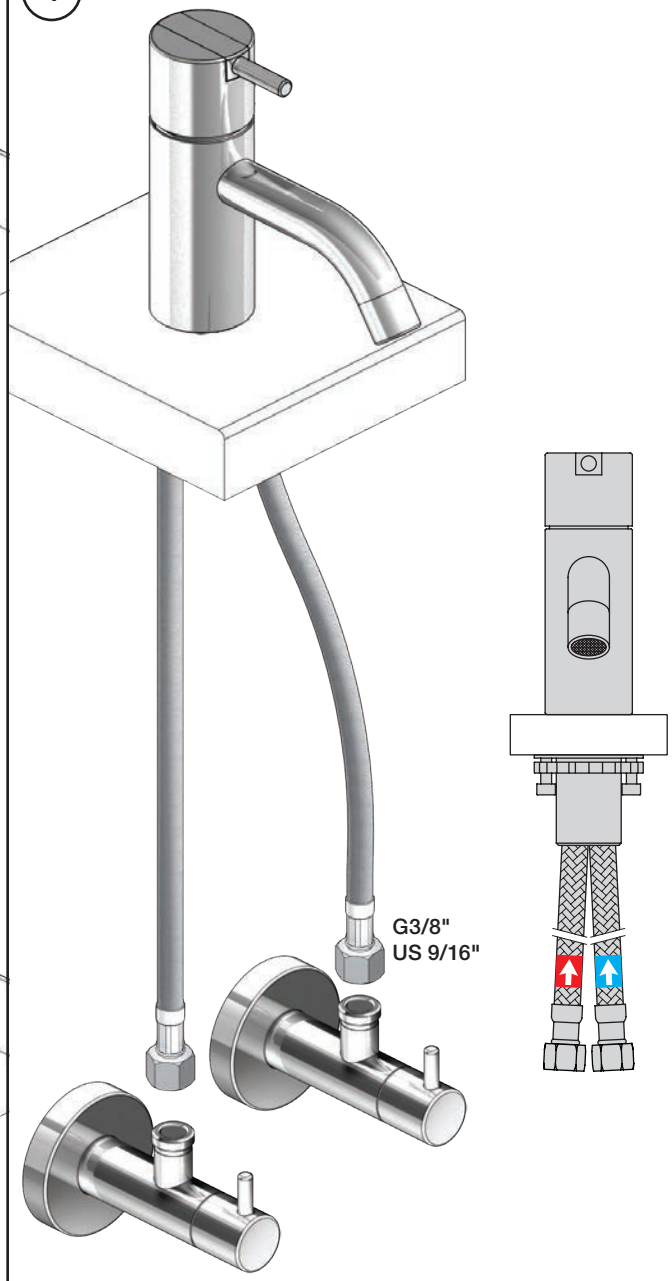

5

HV1L/HV1M
HV3L/HV3M
HV4L/HV4M

VR273L/M

5

Data, 3 Bar/43.5 Psi:

Max.	l/min.	Gal/min.	Note.
HV1/3:	5.0	1.3	Standard
HV1/3:	4.5	1.2	Standard USA
HV1/3:	9.0	1.8	Standard Japan
HV4	9,0	1.8	

Max. 70°C, 158°F

HV1

HV3

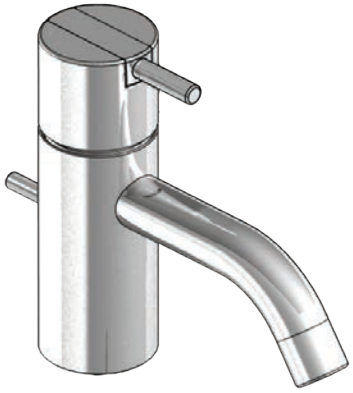

HV4

VOLA A/S • Lunavej 2 • DK-8700 Horsens • Tel. +45 7023 5500 • sales@vola.dk • www.vola.com

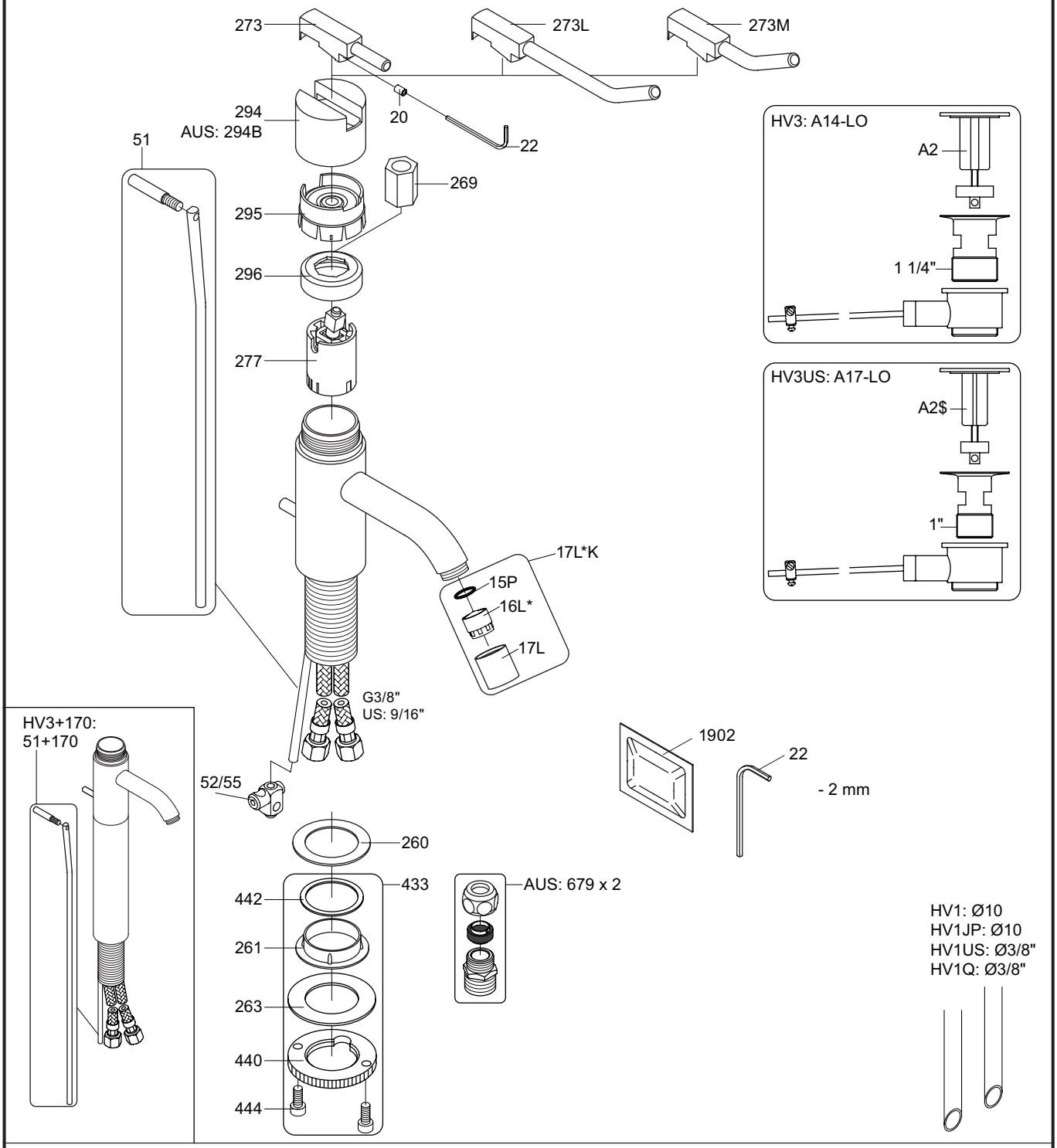

VR277K:	VR22, VR269, VR277
* VR17L4K:	VR15P, VR16L4, VR17L (US-Standard)
* VR17L5K:	VR15P, VR16L5, VR17L (Standard)
* VR17L9K:	VR15P, VR16L9, VR17L (Japan Standard)
* VR17LSK:	VR15P, VR16LS, VR17L
VR297/L/M:	VR20, VR22, VR269, VR273/L/M, VR277, VR294, VR295, VR296
VR433:	VR261, VR263, VR440, VR442, 2xVR444
NR.10/L/M:	VR20, VR22, VR273/L/M, VR294, VR295

vola
Lunavej 2
DK-8700 Horsens
Tlf : + 45 7023 5500
sales@vola.com
www.vola.com

HV3 Family:

HV3: 150, +30, +30/150, +170, +170/150
HV3L: 150, +30, +30/150, +170, +170/150
HV3M: 150, +30, +30/150, +170, +170/150

Date
Jan. 23

Rev.
3

Sheet
SB 23.1