VOLA S50, S50D, S50DH
VOLA KV3, KV4, KV9, KV10, KV15
VOLA HV5, HV8, HV10
VOLA SC2, SC4, SC6, SC8, SC11, SC13

Fitting instruction
Montageanleitung
Monteringsvejledning
Monteringsvägledning
Montage hanleiding
Manuel de montage

GODKENDT TIL DRIKKEVAND

04/00115
04/00307

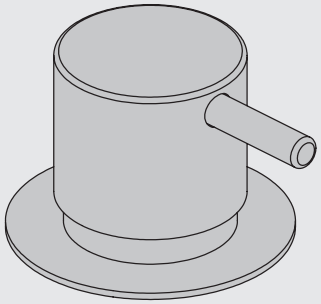

www.vola.com

vola

S50_V9_40999831
19-12-2023

5 703182 372372

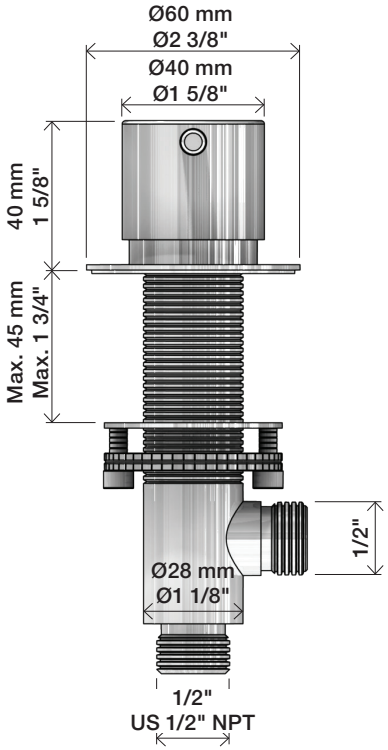

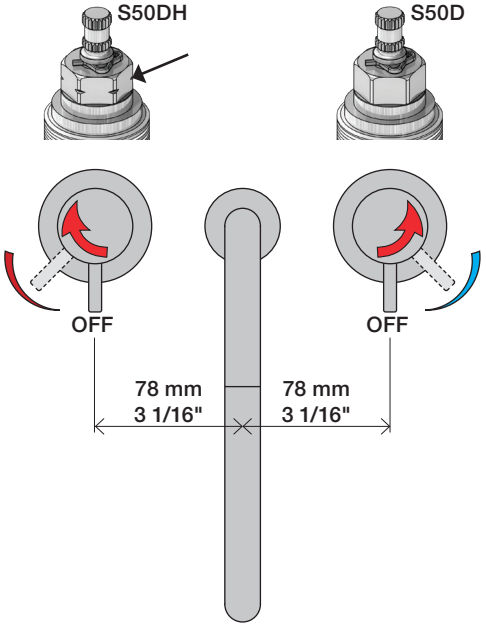

Data, 3 Bar/43.5 Psi:

	l/min.	Gal/min.
S50:	32,0	8.5
KV3:	30,0	7.9
KV4	9,0	2.4
KV10, 15:	9,0	2.4
HV5, 8, 10:	9,0	2.4
SC2, 4 (A24):	16,0	4.2
SC6, 8, 11, 13: (C)	26,0	6.9

Max. 65°C, 150°F

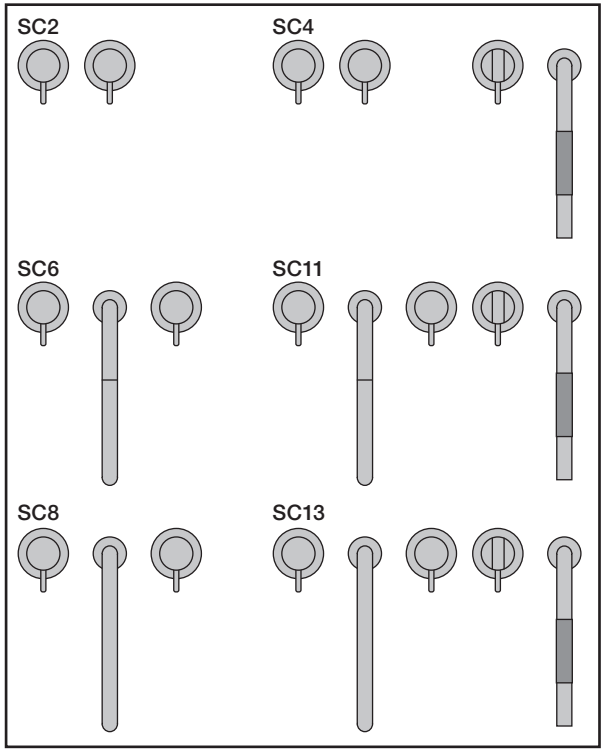

1

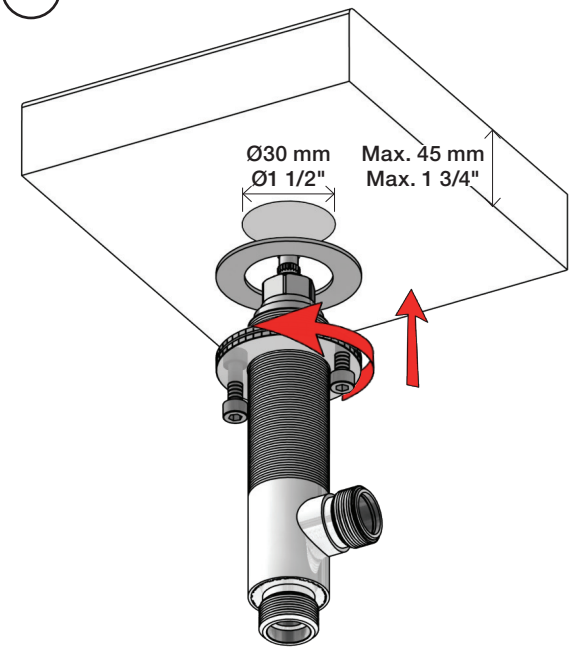

2

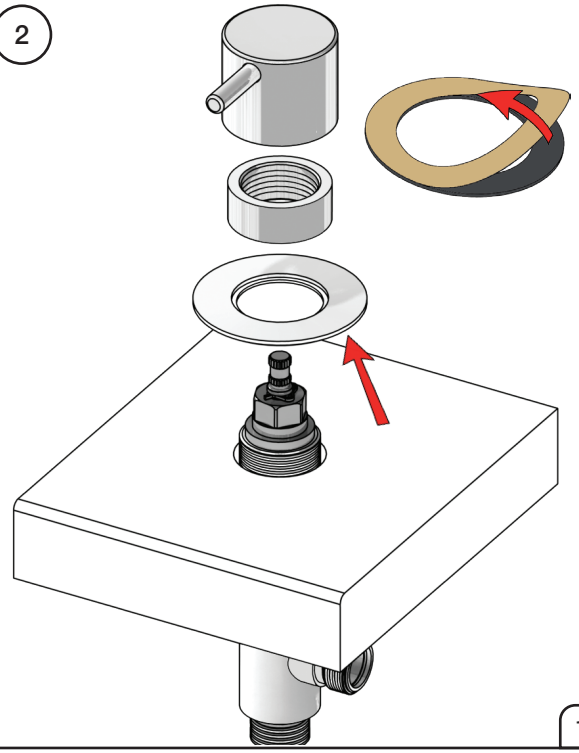

3

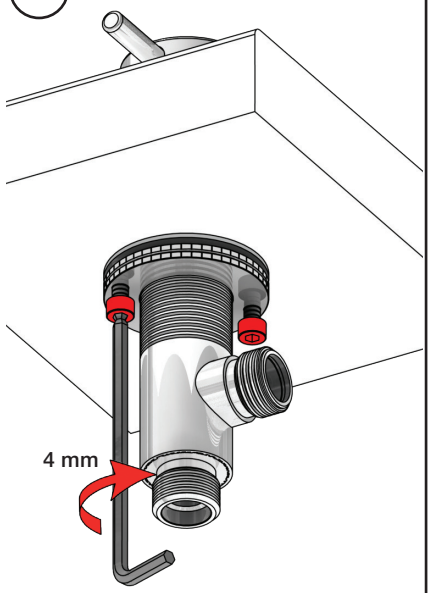

4

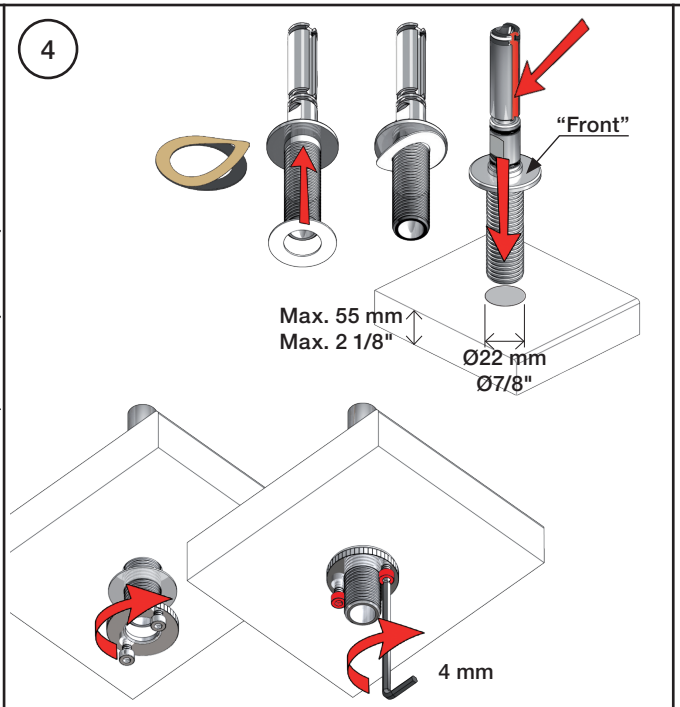

4A

mm:	H	D	h
090	210	200	145
090A	110	85	40
090B	185	100	114
090C	185	100	114
090D	220	200	130
090E	170	200	65
090G	185	140	105
090H	265	230	155
090I	325	230	216
090V	355	145	270

Inches:	H	D	h
090	8 1/2"	8"	5 3/4"
090A	4 1/4"	3 1/2"	1 1/2"
090B	7"	4"	4 1/2"
090C	7"	4"	4 1/2"
090D	8 3/4"	8"	5"
090E	6 3/4"	8"	2 1/2"
090G	7"	5 1/2"	4"
090H	10 1/2"	9"	6"
090I	12 3/4"	9"	8 1/2"
090V	14"	5 3/4"	10 1/2"

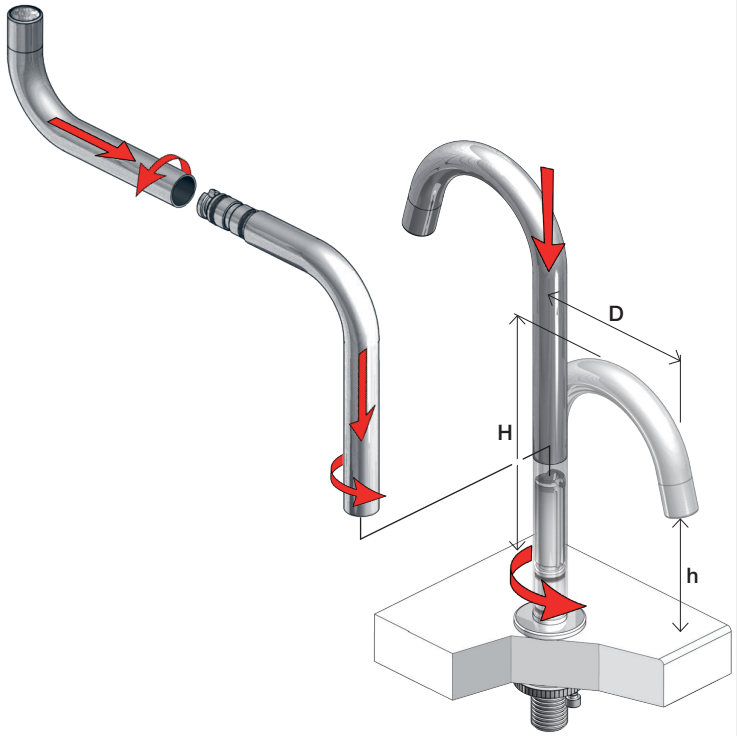

5

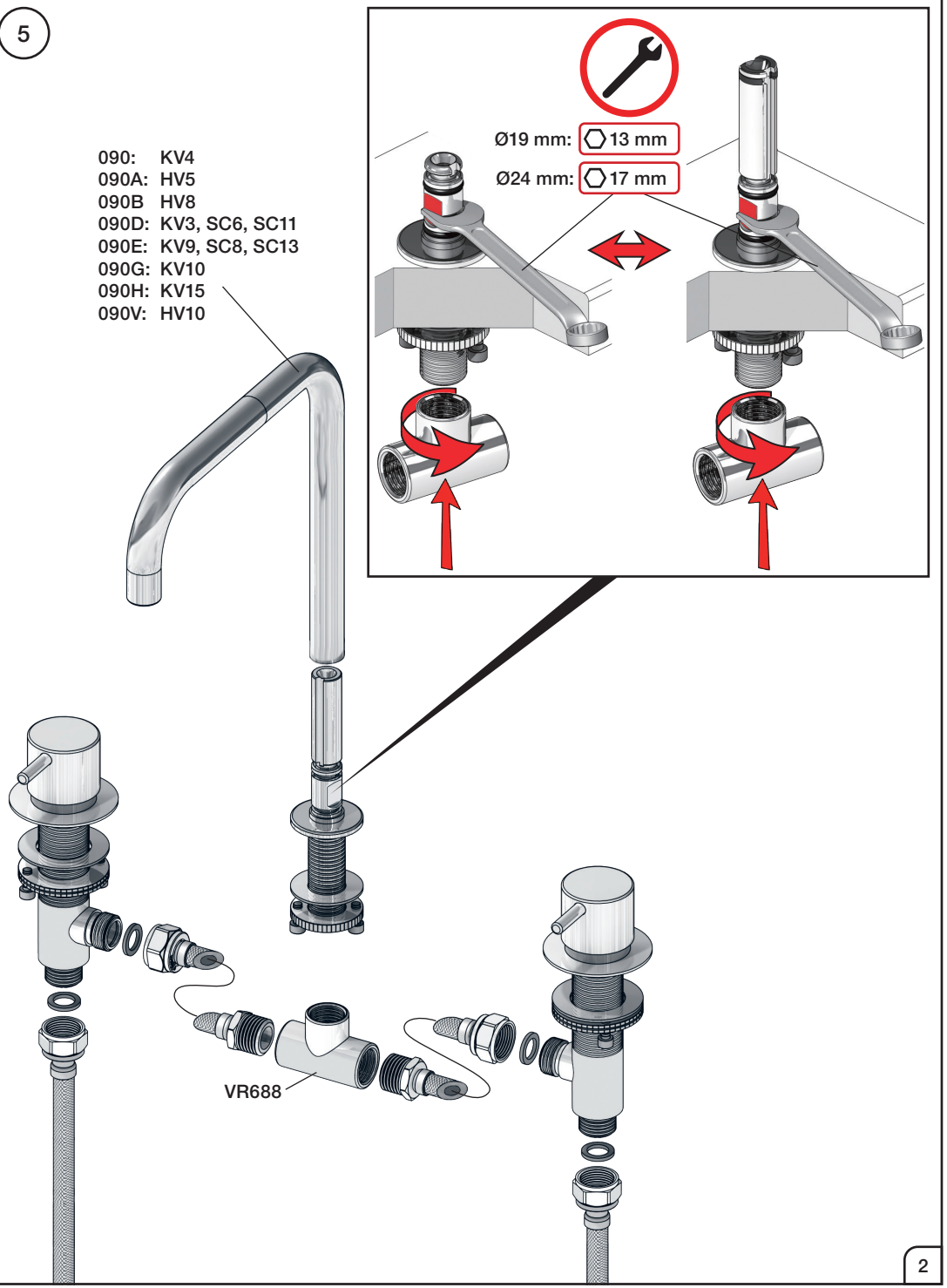

VOLA A/S • Lunavej 2 • DK-8700 Horsens • Tel. +45 7023 5500 • sales@vola.dk • www.vola.com

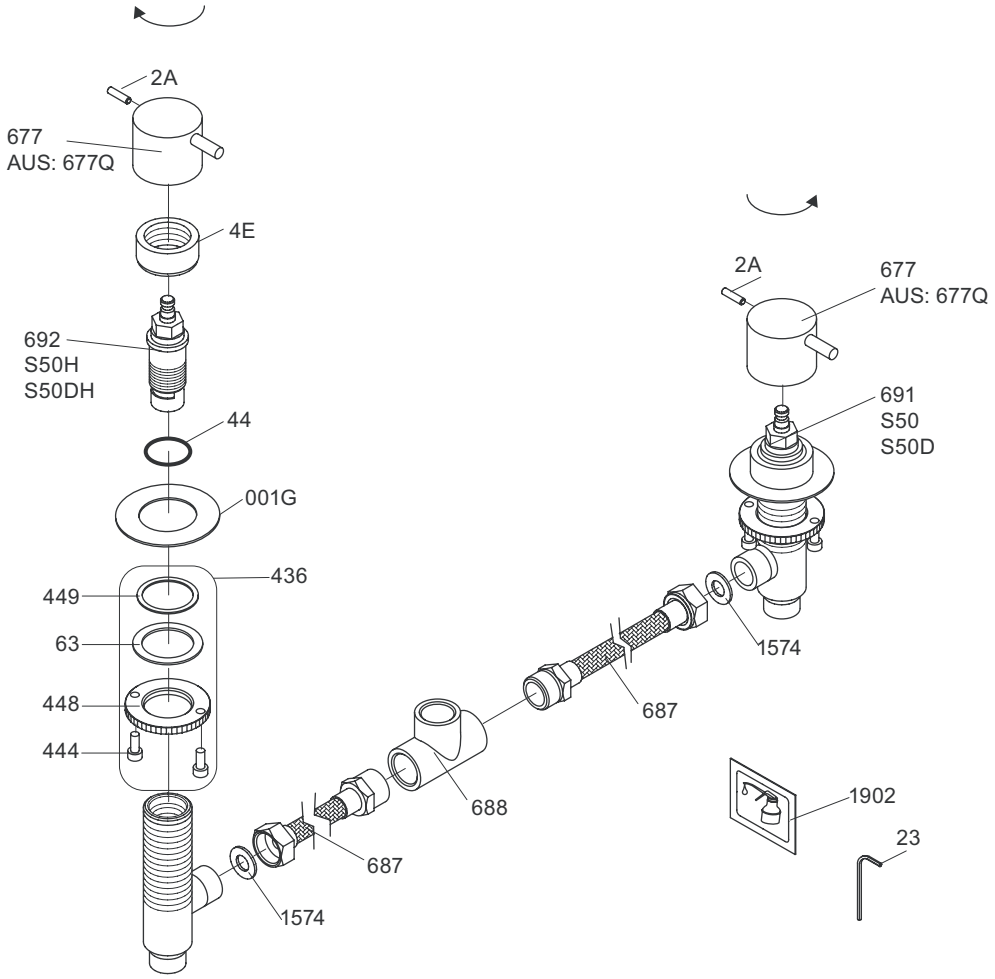

VR691K:	VR23, VR691
VR69K:	VR23, VR692
VR436:	VR63, 2xVR444, VR448, VR449
NR.7:	VR2A, VR23, VR677

vola
Lunavej 2
DK-8700 Horsens
Tlf : + 45 7023 5500
sales@vola.com
www.vola.com

VOLA SC2

Date
Sep. 09

Rev.
1

Sheet
SB 27.61

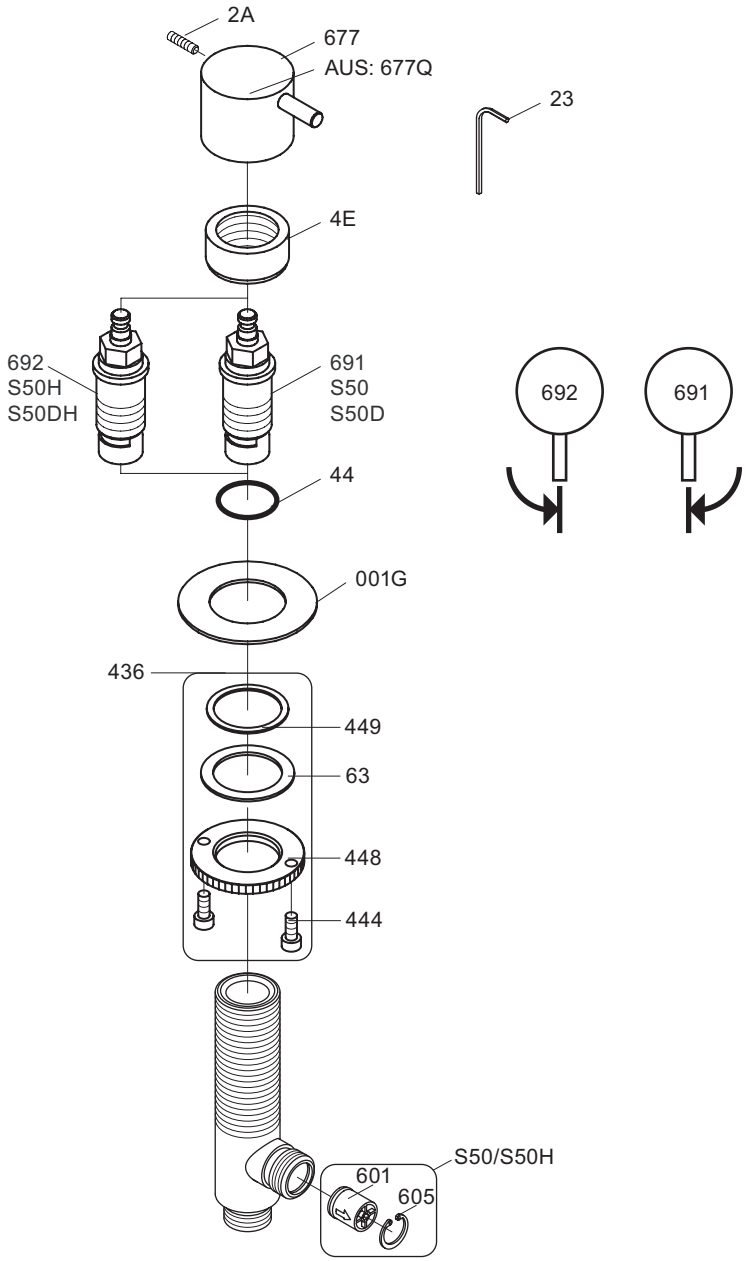

VR691i:	VR23, VR44, VR691
VR692i:	VR23, VR44, VR692
VR436:	VR63, 2xVR444, VR448, VR449
NR.7:	VR2A, VR23, VR677

vola
Lunavej 2
DK-8700 Horsens
Tlf : + 45 7023 5500
sales@vola.com
www.vola.com

VOLA S50/S50H
VOLA S50D/S50DH

Date
Sep. 09

Rev.
2

Sheet
SB 31.3