Colour: paint, PVD + 16, 19, 20

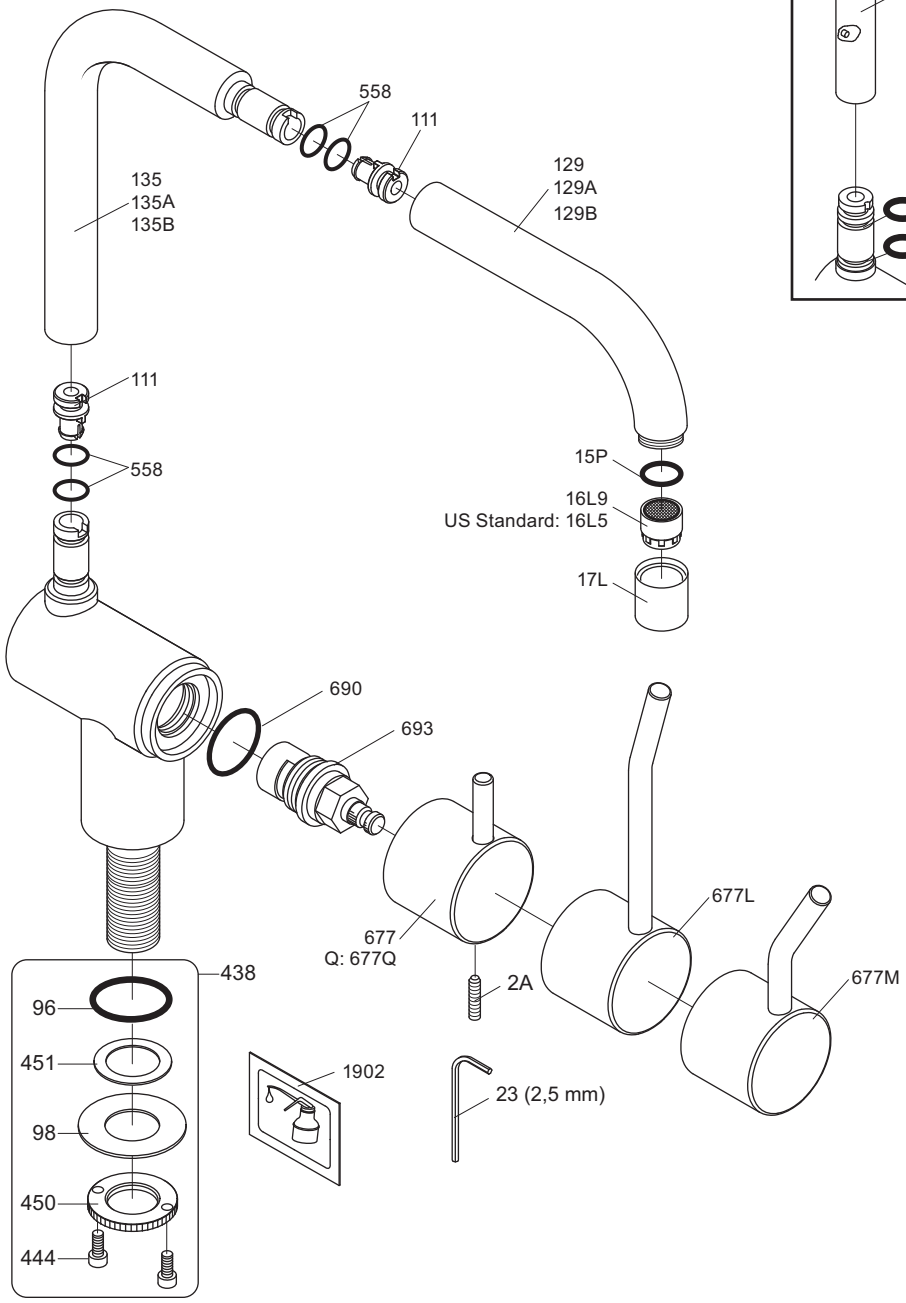

VR30: Colour: paint + 16, 19, 20 (1972 - 12. 2012)

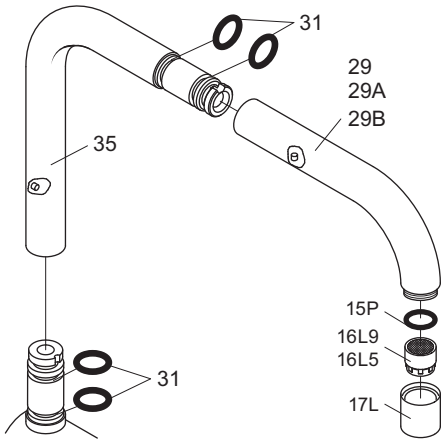

NR.7: VR2A, VR677
VR17LK5: VR15P, VR16L5, VR17L (US Standard)
VR17LK9: VR15P, VR16L9, VR17L
VR30: VR15P, VR16L9, VR17L, VR29P, 4xVR31, VR35
VR128: VR15P, VR16L9, 4xVR558, VR1902
VR130: VR15P, VR16L9, VR17L, 2xVR111, VR126, VR129, VR135, 4xVR558, VR1902
VR438: VR96, VR98, 2xVR444, VR450, VR451
VR693K: VR223, VR693

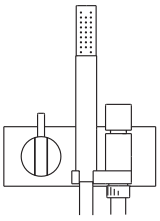

VOLA A/S
Lunavej 2
DK-8700 Horsens
Tlf : + 45 7023 5500
Fax: + 45 7023 5511
sales@vola.com
www.vola.com

VOLA KV8

Dato
Jun. 16

Rev.
7

Blad
SB 25.1